# EXPLODED VIEW

# ISON.21

**NOVAROSSI WORLD S.r.l.**
Via Europa, 20/A - 25040 Monticelli Brusati (BS) - ITALIA
web: www.novarossi.it | e-mail: info@novarossi.it
Tel. +39 030/6850316 | Fax: +39 030/6850314

*I disegni sono puramente indicativi / Drawings are just indicative.*

## CARBURETTOR
### CODE: 24025

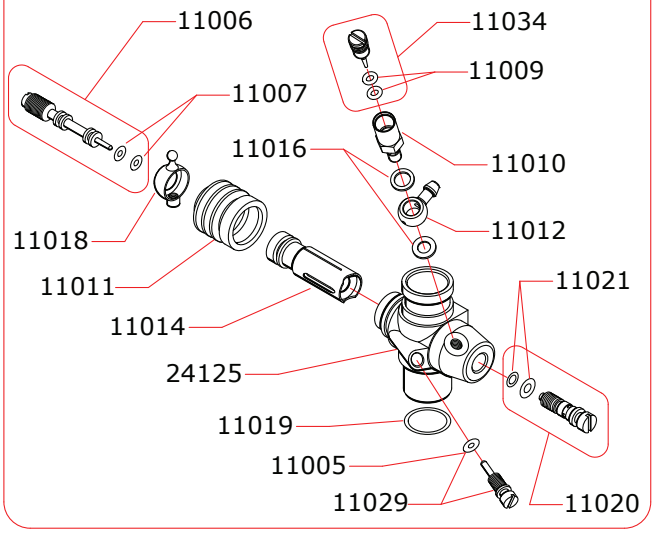


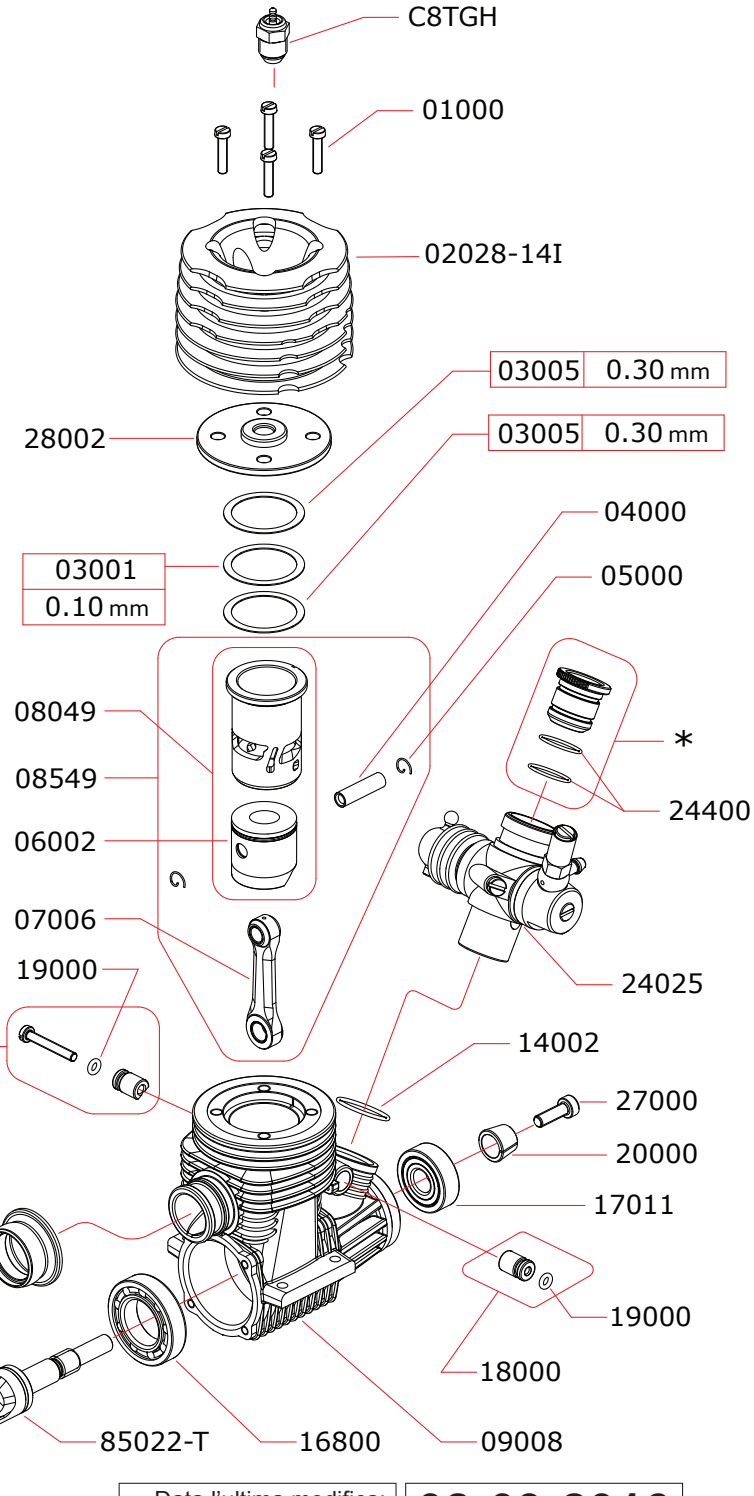


| * | | |
|---|---|---|
| | 24480 | 8.0 mm |
| | 24485 | 8.5 mm |
| | 24490 | 9.0 mm |

| Optional | | |
|---|---|---|
| | 03002 | 0.15 mm |
| | 03003 | 0.20 mm |
| | 03004 | 0.25 mm |

Data l'ultima modifica:
Date of last modification: **08-09-2016**

Pipes Recommended

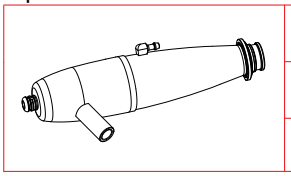

| | |
|---|---|
| 51009 (EFRA 2006) | With ring, 3 chambers |
| 51010 (EFRA 2015) | With ring, 3 chambers |
| 51011 (EFRA 2052) | With ring, 3 chambers |

Manifolds Recommended

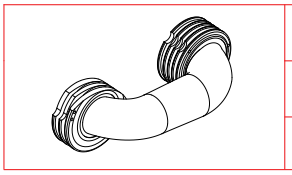

| | |
|---|---|
| 41015 | Conical short, 2 rings |
| 41016 | Conical medium, 2 rings |
| 41017 | Conical long, 2 rings |

**La NOVAROSSI WORLD S.r.l. si riserva il diritto di apportare modifiche al prodotto senza preavviso.**
***NOVAROSSI WORLD S.r.l. reserves the right to modify products without prior notice***