EXPLODED VIEW

MITO 7 ON
MITO 7 ON-A

NOVAROSSI WORLD S.r.l.
Via Europa, 20/A - 25040 Monticelli Brusati (BS) - ITALIA
web: www.novarossi.it | e-mail: info@novarossi.it
Tel. +39 030/6850316 | Fax: +39 030/6850314

I disegni sono puramente indicativi / Drawings are just indicative.

Data ultima modifica:
Date of last modification:
21-10-2015

CARBURETTOR
CODE: 24027

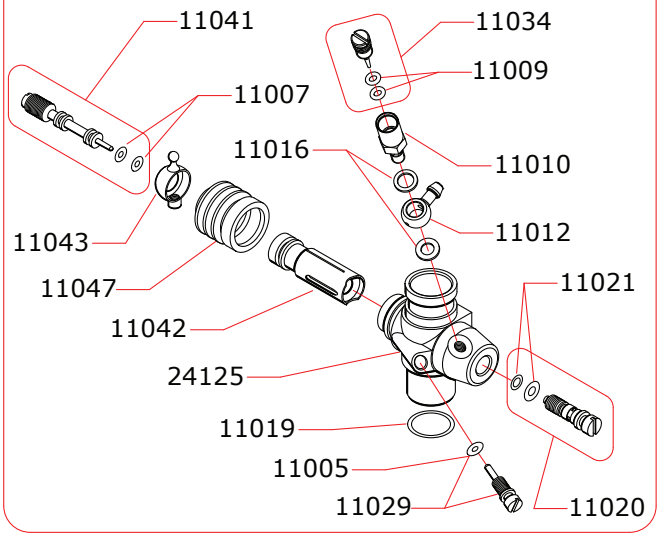

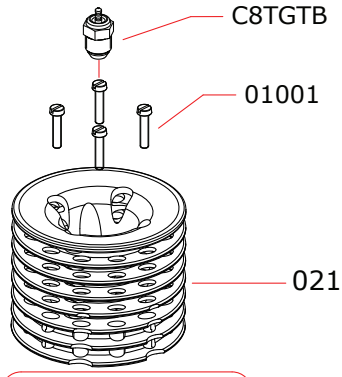

Optional		
	03001XL	0.10 mm

28025 (25% nitro)
29002
03005 XL 0.30 mm
03005 XL 0.30 mm
04000
05001
03002XL 0.15 mm
08000/P7
08500/P7
06009
05000
07006
19000
18000
24400
24027
14002
27000
20000
21000/2
19000
18000
09068-9PN
85026-T
12000
14001
13028

*		
	24480-A	Ø8.00mm
	24485-A	Ø8.50mm
	24490-A	Ø9.00mm

Optional

	60007	SPECIAL SPRING
	28038	for 16% nitro

16009 (steel)	MITO 7 ON-A
16006 (ceramic)	MITO 7 ON

17011 (steel)	MITO 7 ON-A
17012 (ceramic)	MITO 7 ON

Pipes Recommended

	51009 (EFRA 2006)	With ring, 3 chambers
	51010 (EFRA 2015)	With ring, 3 chambers
	51011 (EFRA 2052)	With ring, 3 chambers

Manifolds Recommended

	41015	Conical short, 2 rings
	41016	Conical medium, 2 rings
	41017	Conical long, 2 rings

La NOVAROSSI WORLD S.r.l. si riserva il diritto di apportare modifiche al prodotto senza preavviso.
NOVAROSSI WORLD S.r.l. reserves the right to modify products without prior notice